PRODUCT SHEET

Soround

WOUD

Soround coffee table Ø60 cm

Designed by NUR Design

Soround is a simple, sleek and modern take on a coffee table. The construction with the softness of the circular tabletop and the elegant black table legs forms a new interpretation of the classic coffee table. The Soround series comes in different sizes and heights, which allows for overlapping structure.

Year
2015

Category / type
Tables / coffee table

Materials
Solid fibre concrete/painted ash veneer/Fenix nano laminate table top with black painted metal legs

Fenix nano laminate:
Black: Fenix NTM Nero Ingo 0720

Product dimensions
Ø 600 x H 405/445/490 mm
Ø 23.6 x H 15.9/17.5/19.3"

Assembly intructions
Access the manual here

Country of origin
Latvia

Care instructions
For daily care, wipe off with a clean, moist cloth followed by a soft dry cloth. All our recommended care guides can be downloaded here.

Item no / colour

110520	Concrete (H 405 mm)
110519	Concrete (H 445 mm)
110567	Concrete (H 490 mm)
110540	Black painted ash (H 405 mm)
110541	Black painted ash (H 445 mm)
110565	Black painted ash (H 490 mm)
110521	Black fenix laminate (H 405 mm)
110518	Black fenix laminate (H 445 mm)
110569	Black fenix laminate (H 490 mm)

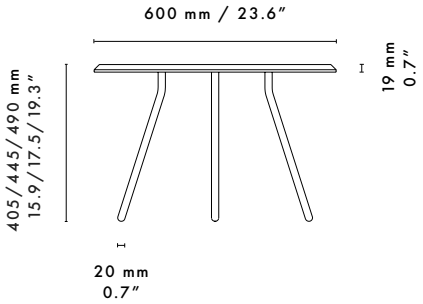

Soround coffee table Ø75 cm

Designed by NUR Design

Soround is a simple, sleek and modern take on a coffee table. The construction with the softness of the circular tabletop and the elegant black table legs forms a new interpretation of the classic coffee table. The Soround series comes in different sizes and heights, which allows for overlapping structure.

Year
2015

Category / type
Tables / coffee table

Materials
Painted ash veneer/fenix nano laminate table top
with black painted metal legs

Fenix nano laminate:
Black: Fenix NTM Nero Ingo (0720)

Product dimensions
Ø 750 x H 405/445/490 mm
Ø 29.5 x H 15.9/17.5/19.3"

Assembly intructions
Access the manual here

Country of origin
Latvia

Care instructions
Use only water for daily cleaning.
All our recommended care guides can be downloaded here.

Item no / colour

110542	Black painted ash (H 405 mm)
110543	Black painted ash (H 445 mm)
110566	Black painted ash (H 490 mm)
110525	Black fenix laminate (H 405 mm)
110526	Black fenix laminate (H 445 mm)
110590	Black fenix laminate (H 490 mm)

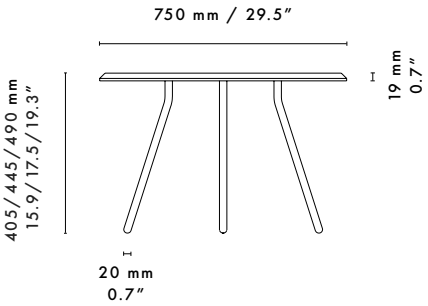

Soround coffee tables

Designed by NUR Design

English text

Soround is a simple, sleek and modern take on a coffee table. The construction with the softness of the circular tabletop and the elegant black table legs forms a new interpretation of the classic coffee table. The Soround series comes in different sizes and heights, which allows for overlapping structure. Combine different materials and create distinctive expressions that match your style. The tables are ideal for indoor lounge areas, living rooms, cafés and restaurants.

Designed by NUR Design
A Danish design studio founded by Maja Bøgh Vindbjerg. Her background as an architect is visible in the sculptural and architectonic lines of her designs. With a minimalistic expression in mind, she aims to create timeless and functional design rooted in the Scandinavian design tradition.

Danish text

Soround er et enkelt, elegant og moderne bud på et sofabord. En nyfortolkning af det klassiske sofabord. Den cirkulære bordplade med afrundede kanter og de elegante sorte bordben tilfører lethed til designet. Soround-serien kommer i forskellige størrelser og højder, hvilket gør designet ideelt til at skabe et sammenhængende sofabordsmiljø. Kombiner de forskellige materialer og skab karakteristiske udtryk, der passer til din stil.

Designet af NUR Design
NUR Design er et dansk designstudio med fokus på nordiske traditioner og et formål om at skabe klassisk og funktionelt design. På tysk betyder ordet nur 'kun' og 'simpelthen', hvilket er det karakteristiske udtryk for designene. Designeren bag studiet, Maja Bøgh Vindbjerg, dimitterede fra Arkitektskolen i Aarhus i 2015. En uddannelse som er tydelig i de skulpturelle og arkitektoniske linjer i hendes designs.