# CIRO TABLE

DESCRIPTION
Ciro redefines the task light as an expressive continuous form. Ciro's fluid tubular structure integrates light and geometry into a unified system, delivering precise illumination while maintaining a minimal footprint. A rotating base and fully articulating head provide complete directional control, allowing light to be positioned downward for tasks, sideways for wall wash, or upward for ambient illumination. This flexibility enables Ciro to function as both a high-performance task light and a versatile ambient solution across desktop and wall applications. Crafted in aluminum, with select components in ABS, Ciro ensures smooth 360° articulation and long-term durability. Integrated dim-to-warm technology delivers warm, human-centric light. Offered in three refined finishes: graphite, clay, and white sand. Ciro integrates effortlessly into both residential and architectural settings.



FIXTURE TYPE
Table

LIGHT SOURCE
High output LED COB

LIGHT CONTROL
Full range dim control

FEATURES
Glare-free illumination
USB-C charging port
Available grommet-mount

SPECIFICATIONS
Voltage: 120-240V 50-60Hz
Power Consumption: 6W MAX
Color temperature: 3000-1800K DTW
Luminosity: 330 Lumens
Luminaire efficacy: 55 Lumens/Watt
Color Rendition Index: 95 CRI
50K hour lifespan
Cable length: 6' (183cm)
Global multi-plug adapter available

CERTIFICATIONS

## FINISHES

GRAPHITE CLAY SAND

## DIMENSIONS

CIRO TABLE

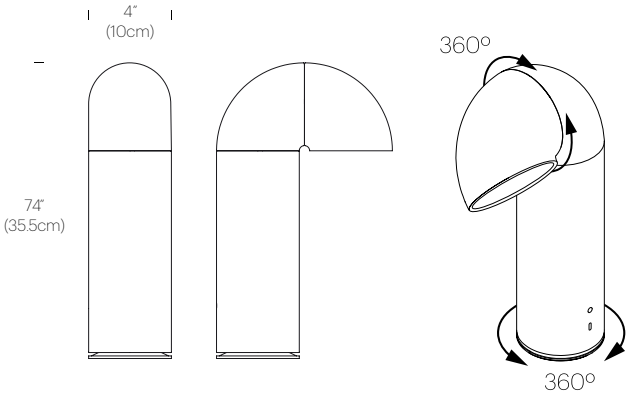


PRODUCT CODES

| | |
|---|---|
| Ciro Table (Graphite): | CIRO TBL GPT |
| Ciro Table (Clay): | CIRO TBL CLY |
| Ciro Table (White Sand): | CIRO TBL SND |

PACKAGING WEIGHT AND DIMENSIONS

| | | |
|---|---|---|
| CIRO TABLE: | 5.6LBS | 18.3'' X 13'' X 5' |
| | 2.5KGS | 46.5cmX33cmX 13cm |

NOTES
Custom requests can be considered on volume orders



AVAILABLE GLOBALLY

# **CIRO** TABLE (Grommet Mount)

DESCRIPTION
Ciro redefines the task light as an expressive continuous form. Ciro's fluid tubular structure integrates light and geometry into a unified system, delivering precise illumination while maintaining a minimal footprint. A rotating base and fully articulating head provide complete directional control, allowing light to be positioned downward for tasks, sideways for wall wash, or upward for ambient illumination. This flexibility enables Ciro to function as both a high-performance task light and a versatile ambient solution across desktop and wall applications. Crafted in aluminum, with select components in ABS, Ciro ensures smooth 360° articulation and long-term durability. Integrated dim-to-warm technology delivers warm, human-centric light. Offered in three refined finishes: graphite, clay, and white sand. Ciro integrates effortlessly into both residential and architectural settings.



FIXTURE TYPE
Surface Mount

LIGHT SOURCE
High output LED COB

LIGHT CONTROL
Full range dim control

FEATURES
Glare-free illumination
USB-C charging port
Available grommet-mount

SPECIFICATIONS
Voltage: 120-240V 50-60Hz
Power Consumption: 6W MAX
Color temperature: 3000-1800K DTW
Luminosity: 330 Lumens
Luminaire efficacy: 55 Lumens/Watt
Color Rendition Index: 95 CRI
50K hour lifespan
Cable length: 6' (183cm)
Global multi-plug adapter available

CERTIFICATIONS
Intertek

## FINISHES




## DIMENSIONS

CIRO TABLE GROMMET

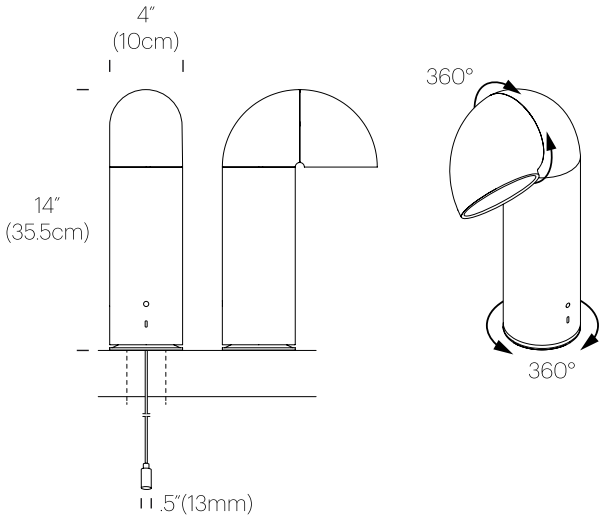


Ciro Table Grommet can be surface mounted using (2)M6 fasteners (length depends on table thickness).

PRODUCT CODES

| | |
|---|---|
| Ciro Table Grommet (Graphite): | CIRO GRM GPT |
| Ciro Table Grommet (Clay): | CIRO GRM CLY |
| Ciro Table Grommet (White Sand): | CIRO GRM SND |

PACKAGING WEIGHT AND DIMENSIONS

| | | |
|---|---|---|
| CIRO TABLE: | 5.6LBS | 18.3'' X 13'' X 5' |
| | 2.5KGS | 46.5cmX33cmX 13cm |

NOTES
Custom requests can be considered on volume orders



AVAILABLE GLOBALLY